Soft Switching Approach to Reducing Transition Losses in an On/Off Hydraulic Valve

Michael B. Rannow
e-mail: rann0018@umn.edu

Perry Y. Li[1]
e-mail: pli@me.umn.edu

Center for Compact and Efficient Fluid Power,
Department of Mechanical Engineering,
University of Minnesota,
Minneapolis, MN 55455

A method for significantly reducing the losses associated with an on/off controlled hydraulic system is proposed. There has been a growing interest in the use of on/off valves to control hydraulic systems as a means of improving system efficiency. While on/off valves are efficient when they are fully open or fully closed, a significant amount of energy can be lost in throttling as the valve transitions between the two states when the switching times are not negligible. A soft switching approach is proposed as a method of eliminating the majority of these transition losses. The operating principle of soft switching is that fluid can temporarily flow through a check valve or into a small chamber while valve orifices are partially closed. The fluid can then flow out of the chamber once the valve has fully transitioned. Thus, fluid flows through the valve only when it is in its most efficient fully open state. A model of the system is derived and simulated, with results indicating that the soft switching approach can reduce transition and compressibility losses by 81% and total system losses by 64%. The soft switching approach has the potential to improve the efficiency of on/off controlled systems and is particularly beneficial as switching frequencies are increased. The soft switching approach will also facilitate the use of slower on/off valves for effective on/off control; in simulation, a valve with soft switching matched the efficiency of an on/off valve that was 4.4 times faster. [DOI: 10.1115/1.4006620]

1 Introduction

Control using high-speed on–off valves has been proposed as a way to significantly improve the efficiency of hydraulic systems over the traditional method of metering valve control. Control using on/off valves, which mimics switch-mode converters in power electronics, saves energy by eliminating high pressure throttling of hydraulic oil through metering or relief valves. An example of an on/off controlled system is the virtual variable displacement pump proposed by Tomlinson and Burrows [1] and studied by Li et al. [2], shown in Fig. 1. In this circuit, the on/off valve sends the full pump flow to either the load or the tank with minimal pressure drop, resulting in two highly efficient states. The output of the system is controlled through the use of pulse-width-modulation (PWM).

While on/off control has the potential for significant energy savings over metering valve control, several effects contribute to inefficiencies in a PWM controlled hydraulic system. Cao et al. [3] suggest that energy can be lost in an on/off valve system as a result of valve transition times, fluid compressibility, pressure drops across the on/off valve(s), hysteresis in the accumulator bladder, fluid friction, and leakage. The authors have previously quantified a number of these sources of energy loss [4,5] and found that, for the systems studied, the valve transition time was the most significant source of energy loss, equating to roughly 60% of the total loss. The other significant losses in the system are due to compressibility (20%), full open throttling (19%), and leakage (1%).

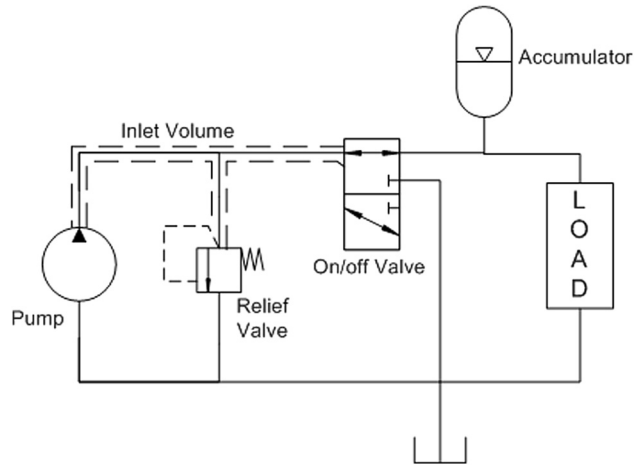

Fig. 1 Virtual variable displacement pump using a three-way on/off valve

The valve transition loss arises from the fact that, as the on/off valve transitions between its two states, the open orifice area is decreased while a fixed flow rate of oil is flowing through it. This results in a high pressure drop across the valve and a significant amount of energy loss in throttling.

The current focus of development in the on/off controlled systems is to develop valves that can achieve high PWM frequencies, which are desirable for minimizing the system ripple and improving control bandwidth [4]. Fast valves can also reduce the transition loss by reducing the amount of time spent throttling the flow. However, in conventional spool or poppet valves, the power required to accelerate and decelerate the valve spool increases proportionally to the switching speed cubed. Thus, any reduction in transition losses by increasing the valve speed may be lost to valve actuation power.

An alternative design that has been proposed by the authors is the unidirectional rotary on/off valve [5]. In this design, the valve spool rotates at a constant speed, and thus no power is required for spool acceleration. In this design, the transition time decreases proportionally to the PWM period.

In this paper, a new approach is proposed to significantly reduce the throttling loss during valve transition by providing a temporary alternate path for the fluid when the valve area is small. This soft switching approach is similar to a technique in electronic switch-mode converters that use small capacitors to temporarily absorb current when the transistors change state [6]. In an electronic system, soft switching is achieved by sizing components to induce large current ripples, which create temporary periods of reverse current. This is impractical in a hydraulic system. In this paper, we propose an alternative method in which an actively locked soft switch chamber is used in place of the traditional passive elements.

The reduction in transition loss can facilitate effective on/off control with slower valves which would normally be limited by transition losses. Since increasing the valve speed typically involves increasing the actuation power or decreasing the full open area, allowing slower valves can significantly reduce the energy consumption in an on/off controlled system.

Section 2 outlines the soft switching concept, Sec. 3 describes the model equations used to describe the system, Sec. 4 presents simulation results, and Sec. 5 contains a discussion of the results.

[1]Corresponding author.

Contributed by the Dynamic Systems Division of ASME for publication in the Journal of Dynamic Systems, Measurement, and Control. Manuscript received August 24, 2009; final manuscript received March 7, 2012; published online September 24, 2012. Editor: J. Karl Hedrick.

Copyright © 2012 by ASME

Downloaded 29 Oct 2012 to 128.101.142.152. Redistribution subject to ASME license or copyright; see http://www.asme.org/terms/Terms_Use.cfm

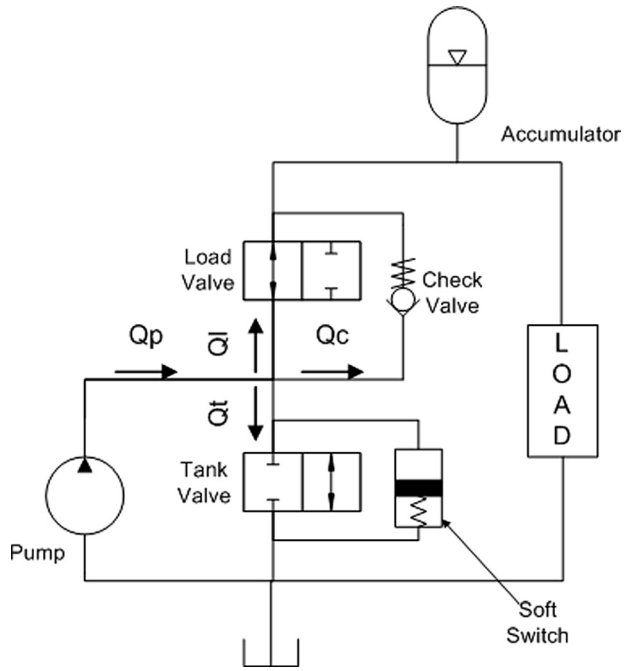

Fig. 2 Three-way circuit with split tank and load valves, check valve, and soft switch

2 Soft Switching Concept

While the soft switching concept can be applied to different system architectures, in this paper it will be described in conjunction with the configuration depicted in Fig. 1. This configuration uses a three-way on/off valve to vary the flow used from a fixed displacement pump. When considering the operation of the three-way valve with soft switching, it is easier to imagine the three-way valve as two, two-way valves as shown in Fig. 2.

In a typical PWM cycle, beginning with the load valve fully open and the tank valve fully closed, the valve sequence is as follows: The load valve will close during time interval t_1, followed by the tank valve opening during t_2. After some dwell time specified by the duty ratio, the tank valve will close during t_3, which is followed by the load valve opening again over interval t_4. Thus, in each PWM cycle there are four transition events during which throttling can occur. Figure 3 depicts area profiles for the two valves following linear area trajectories, which is the characteristic of a rotary on/off valve [5].

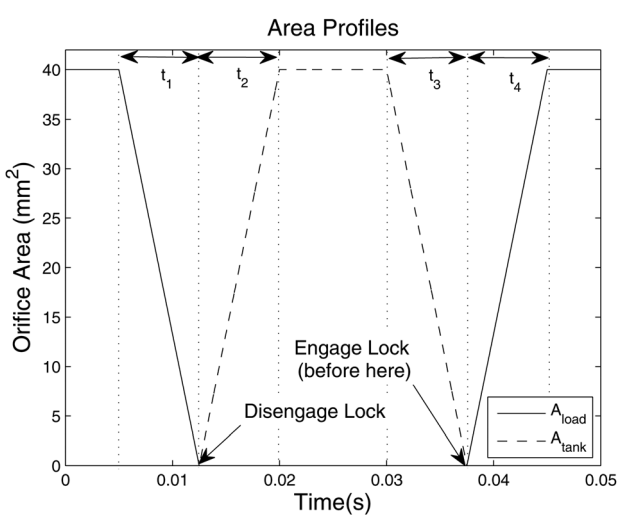

Fig. 3 Area profiles for 1 PWM period

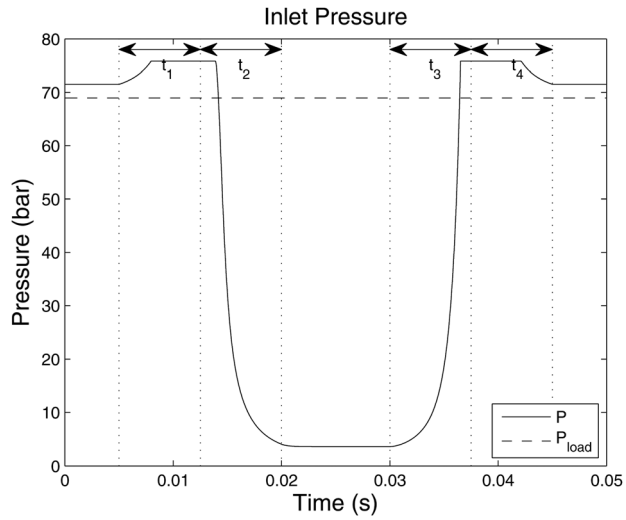

Fig. 4 Inlet pressure profile for a three-way circuit with a relief valve

In the simplest circuit, which uses a relief valve and is shown in Fig. 1, throttling will occur during each of these transition events. Figure 4 shows the pressure in the inlet volume for this circuit. Notice that significant pressure spikes will occur between t_1 and t_2 and again between t_3 and t_4 when both valves are closed. These pressure spikes will be limited only by the compressibility of the oil in the inlet volume and the pressure setting of the relief valve.

The soft switching approach can be applied to the load valve by simply adding a check valve in parallel instead of the relief valve, as shown in Fig. 2. With this addition, the transitions of the load valve will be eliminated by allowing oil to flow through the check valve rather than the partially open load valve. In some cases, the load valve could be completely replaced by the check valve. However, the three-way valve can be useful in some cases, such as in a valve that captures fluid momentum for actuation power [5]. Other on/off configurations, such as the multicircuit approach described in Ref. [7], cannot use check valves to reduce the transition loss and require more complicated techniques.

The addition of a check valve dramatically reduces the energy loss due to throttling. However, a significant loss still exists as a result of the two remaining transitions (t_2 and t_3). To eliminate these transition losses, the soft switch chamber shown in Fig. 5 can be used as a temporary storage mechanism.

The soft switch consists of a small chamber with a piston, a spring, and an externally actuated locking mechanism. The locking mechanism holds the piston near the middle of the chamber. Once the tank valve begins to open, the lock is released, and the high pressure fluid fills the chamber. Thus, the fluid is able to flow into the soft switch instead of being forced through the closing valve. Once the tank valve is fully open, the spring in the soft switch chamber will force the piston back up to the top of the chamber. Then, once the tank valve begins to close and the pressure rises above the spring pressure, fluid will once again flow into the soft switch. Once the piston hits the lock mechanism, the tank valve should be mostly closed, and the pressure will quickly rise and open the check valve. Finally, once the load valve is fully open, the check valve will close and the fluid will flow through the full open load valve.

3 Modeling

To study the operation of the soft switch, a model of the pressure dynamics and soft switch chamber is developed. In defining this model, it is assumed that the output pressure is constant over the switching period, there is no leakage, and fluid friction is

Downloaded 29 Oct 2012 to 128.101.142.152. Redistribution subject to ASME license or copyright; see http://www.asme.org/terms/Terms_Use.cfm

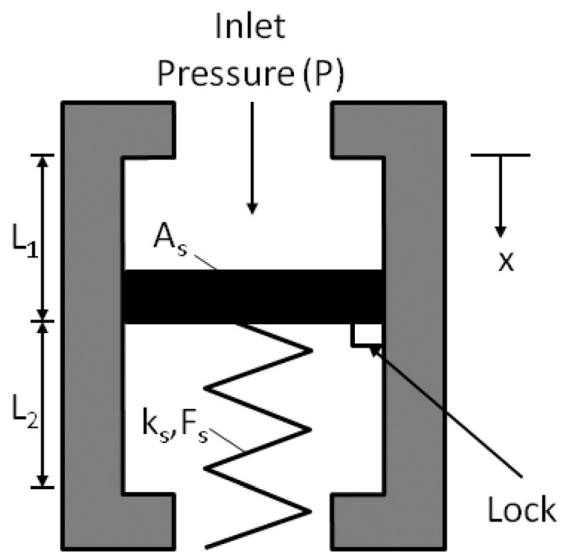

Fig. 5 Diagram of the soft switch chamber

negligible. Fluid inertia is also neglected due to the fact that it is highly dependent on the shape of the passages in the valve.

The area profiles for the transitioning valve were chosen to be linear as shown in Fig. 3, which matches the profile of a rotary on/off valve. The soft switching principle will apply to any other type of valve trajectory, provided that the components are sized properly.

The pressure in the inlet volume of the circuit, which is depicted in Fig. 1, is given by the following equation:

$$\dot{P} = \frac{\beta(P)}{V_{in}}\left(Q_p - Q_t - Q_l - Q_c - A_s\dot{x}\right) \tag{1}$$

where V_{in} is the inlet volume; Q_p is the constant flow rate from the pump; Q_t, Q_l, and Q_c are the flow rates through the tank, load, and check valves, respectively; A_s is the area of the soft switch piston; and x is the position of the soft switch piston. The bulk modulus of the hydraulic oil, $\beta(P)$, is modeled using the pressure dependent equation developed by Yu et al. [8] with the dissolution of air at high pressure neglected

$$\beta(P) = \frac{\beta_{\text{oil}}\left(\frac{P}{P_{\text{atm}}}\right)^{\frac{1}{\gamma}}}{\frac{R\beta_{\text{oil}}}{P\gamma} + \left(\frac{P}{P_{\text{atm}}}\right)^{\frac{1}{\gamma}} - R} \tag{2}$$

where $\beta_{\text{oil}} = 1701$ MPa is the bulk modulus of air free oil; P_{atm} is the atmospheric pressure; and R is the ratio of entrained air volume to total volume.

Flow rates through the check, tank, and load valves are determined by the orifice equation

$$Q_c = c_d a_c(t)\sqrt{\frac{2|P - P_{\text{load}}|}{\rho}}\text{sign}(P - P_{\text{load}}) \tag{3}$$

$$Q_t = c_d a_t(t)\sqrt{\frac{2|P - P_{\text{atm}}|}{\rho}}\text{sign}(P - P_{\text{atm}}) \tag{4}$$

$$Q_l = c_d a_l(t)\sqrt{\frac{2|P - P_{\text{load}}|}{\rho}}\text{sign}(P - P_{\text{load}}) \tag{5}$$

where c_d is the orifice coefficient; $a_c(t)$, $a_t(t)$, and $a_l(t)$ are the open areas for the check, tank, and load valves, respectively; and ρ is the density of the hydraulic oil. Note that the pressure drop across the fully open valve with full flow going through it is

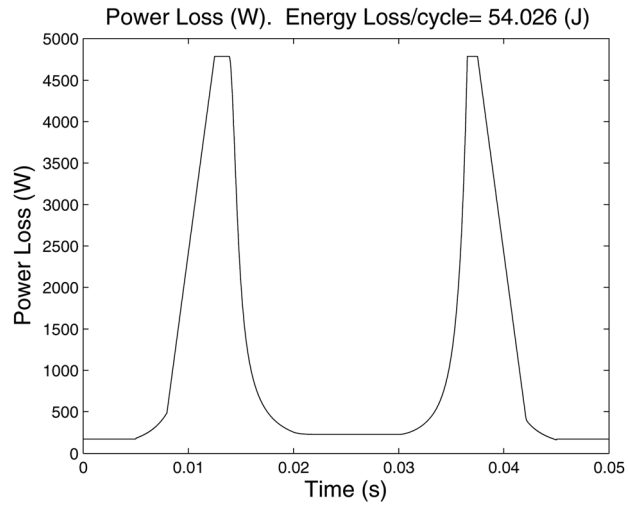

Fig. 6 Power loss over 1 PWM period for a system with a relief valve

$$\Delta P_{\text{open}} = \frac{Q_p^2\rho}{2a_0^2c_d^2} \tag{6}$$

where a_0 is the full open area.

The check valve is modeled using the following equation:

$$\ddot{x}_c = \frac{1}{m_c}\left((P - P_{\text{load}})\pi\frac{d_c^2}{4} - k_c x_c - b_c\dot{x}_c - F_{c,\text{preload}}\right) \tag{7}$$

where x_c is the check valve position, m_c is its mass, b_c is the viscous damping coefficient, d_c is the diameter of the check ball, k_c is the spring stiffness, and $F_{c,\text{preload}}$ is the spring preload which is designed to be larger than the full open pressure drop. The open area of the check valve is

$$a_c(t) = \pi d_c x_c(t) \tag{8}$$

The soft switch chamber shown in Fig. 5 is modeled as a mass-spring-damper system with a pressure driving force

$$\ddot{x} = \frac{1}{m_s}\left(PA_s - k_s x - F_{s,\text{preload}-b s\dot{x}}\right) \tag{9}$$

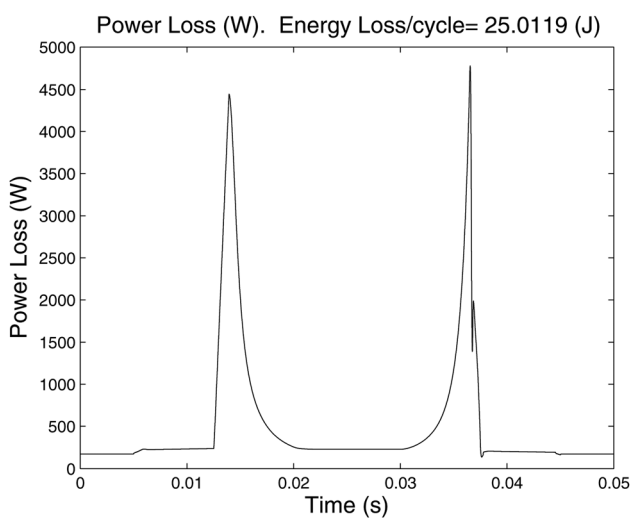

Fig. 7 Power loss over 1 PWM period for a system with a check-valve-only

Downloaded 29 Oct 2012 to 128.101.142.152. Redistribution subject to ASME license or copyright; see http://www.asme.org/terms/Terms_Use.cfm

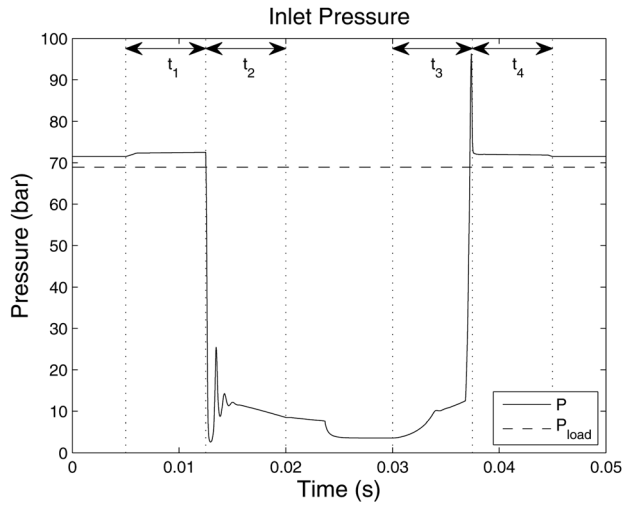

Fig. 8 Pressure profile for a system with soft switching

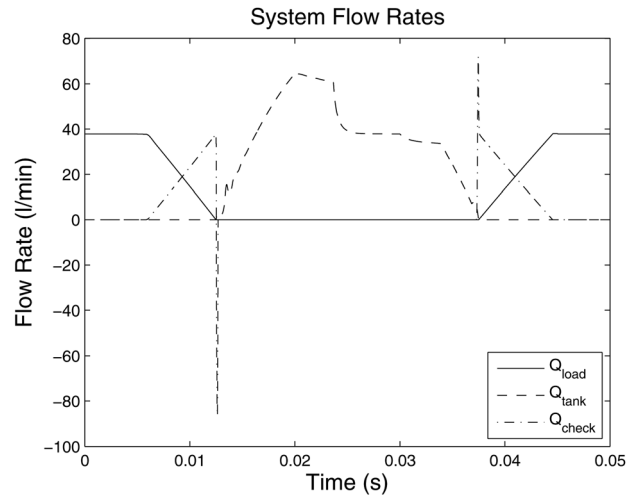

Fig. 9 Flow rates in a soft switching system

where m_s is the mass of the soft switch piston, b_s is the viscous damping coefficient, k_s is the spring stiffness, and $F_{s,\text{preload}}$ represents the spring preload.

In this paper, the piston lock is treated as an instantaneously acting mechanism that can be arbitrarily disengaged. There are several approaches for developing an actual locking mechanism, and a discussion of these can be found in Sec. 5. The overall length of the soft switch chamber is split into two sections, L_1 and L_2. When the piston lock is active, the piston is only allowed to travel between 0 and L_1. Once the lock is disengaged, the piston can travel throughout the entire chamber.

4 Simulations

Using the equations derived in Sec. 3, simulations of the three-way circuit with and without soft switching were conducted. The valve parameters were selected to approximate a three-way rotary on/off valve with a PWM frequency of 20 Hz. The time for each transition was specified to be 7.5 ms. The system is simulated with a flow rate of 37.9 l/min and a load pressure of 69 bars. The fully open area was 40 mm^2. The inlet volume of the system was 30 cm^3, and the oil was assumed to have 3% entrained air. The check valve spring was set to have a 30 N preload and a spring rate of 2 N/mm. The area was 95 mm^2, the damping coefficient was 15 Ns/m, and the mass was 1.9 g. The system without a check valve or a soft switch chamber was simulated with a relief pressure 8.3 bars higher than the load pressure. In an actual system, this would likely be set much higher, depending on the required variation in the load pressure. As the relief pressure is increased, the losses in the baseline system also increase.

Note that the fixed load pressure condition is not a requirement of the approach; soft switching works for dynamic loads as well as fixed. However, since most on/off systems require an accumulator to smooth pressure ripples, a load that is relatively constant over one PWM period is a typical load condition for moderate frequencies.

The pressure profile at 50% duty ratio for the relief valve system is shown in Fig. 4.

The power loss in the relief valve case is shown in Fig. 6, with a total loss of 54 J for one cycle. In this figure, the large spikes in power loss due to the valve transitions are evident. Notice that there is a baseline loss of about 226 W, which is due to the full open pressure drop. This accounts for about 11.3 J of energy lost during each cycle and cannot be addressed by soft switching.

By adding a check valve across the load valve, the power loss can be dramatically reduced. Figure 7 shows the power loss in the check valve system, with a total loss of 25 J for one cycle. In this figure, the two large loss spikes have been reduced by about half as the check valve eliminates losses in two of the four transition events.

To further improve the system efficiency, a soft switching chamber was added with a piston area of 132 mm^2 and a piston mass of 2.6 g. The first segment of the chamber had a length of $L_1 = 6$ mm and the second had a length of $L_2 = 12$ mm. The spring preload was set to be 110 N, and the spring rate was 1.5 N/mm. The damping of the piston was set at 8 Ns/m. The pressure profile for a system using these parameters is shown in Fig. 8.

Notice that the gradual transitions have been eliminated by the soft switch. The full open pressure between the two transitions is higher than in the case without soft switching. This is due to the emptying of the soft switch chamber which maintains the higher pressure resulting from the spring force. Once the soft switch chamber is empty, the pressure drops down to ΔP_{open} before rising again as the chamber fills.

The flow rates through the three different valves are shown in Fig. 9, which demonstrates the operating principle of the soft switch concept. From 0.0125 s to 0.0162 s, the net flow through the three valves is less than the pump flow rate, and from 0.0162 s to 0.0275 s, the flow is higher than the full pump flow. Thus, the soft switch chamber temporarily stores fluid while the valve is transitioning and then releases it once the valves are fully open.

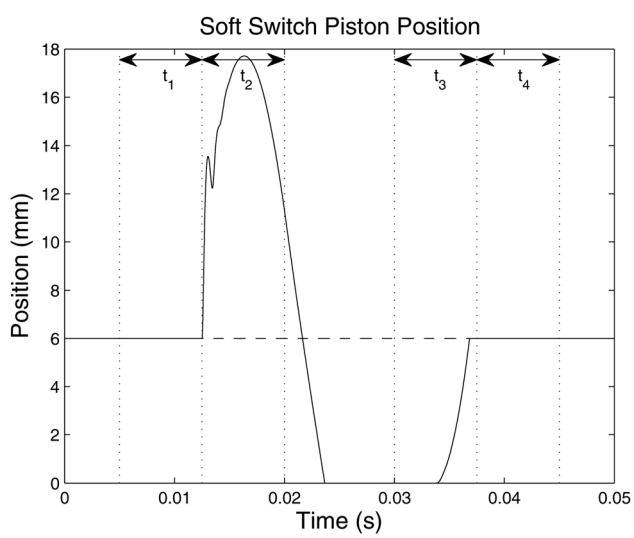

Fig. 10 Position of the soft switch piston over 1 PWM period

Downloaded 29 Oct 2012 to 128.101.142.152. Redistribution subject to ASME license or copyright; see http://www.asme.org/terms/Terms_Use.cfm

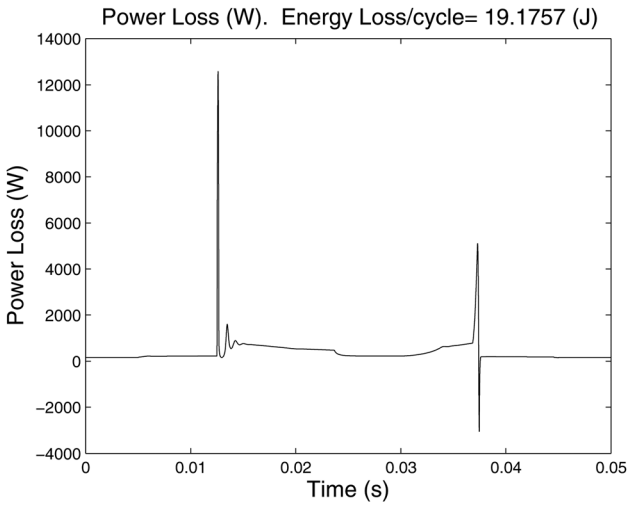

Fig. 11 Power loss over 1 PWM period for a system with soft switching

The position of the soft switch piston is shown in Fig. 10. At the start of the simulation, the piston is pressed against the locking mechanism. When the lock is released, the piston leaves its initial position at L_1 and increases while the inlet pressure is higher than the spring pressure. Once the tank valve opens enough for the pressure to drop below the spring pressure, the soft switch chamber empties. The spring force must be high enough for the piston to return past L_1 before the tank valve begins to close again. Thus, the system components must be sized to ensure that the soft switch will operate properly over the desired range of operation. Another constraint on the system is that the inlet pressure must rise above load pressure before the load valve begins to open. Otherwise, high pressure fluid will flow back from the load, resulting in higher losses. This limits the length of L_1.

The power loss over one cycle in the soft switching system is shown in Fig. 11. From this figure, it is clear that the majority of the large transition spikes have been eliminated by the soft switch. The remnant of the first spike is due to the fact that the soft switch piston requires some energy to move. The second remnant is due to fluid compressibility and the dynamics of the check valve. The power loss between the two spikes is higher than in the system without soft switching due to the emptying soft switch chamber. However, it is evident from the fact that the total energy lost in one cycle is reduced to 19.2 J that this additional loss is less than the energy that has been saved during transition, as shown in Table 1.

5 Discussion

Table 1 shows that adding a check valve in parallel with the load valve reduced the overall system loss by about 53% from a system using only a relief valve to limit pressure spikes. The addition of a soft switch chamber eliminated an additional 11% of the original losses, for a 64% reduction in the overall loss by applying the soft switching concept. Notice that the relief valve was set only slightly above the load pressure. In many systems, the relief pressure must be set significantly higher to allow for varying load pressures. This would increase the losses in the relief valve system, making the soft switching approach even more beneficial.

Table 1 Loss per cycle for system with and without soft switching

System	Total loss/cycle (J)
Relief	54.0
Check	25.0
Check and soft switch	19.2

The full open loss for the simulated system was about 11.3 J, which cannot be reduced by the soft switching approach. Thus, looking only at transition and compressibility losses, the relief, check, and soft switch systems lose 42.7 J, 13.7 J, and 7.9 J, respectively. These numbers indicate that the soft switching approach can eliminate 81% of the transition and compressibility losses that exist in the base relief valve system.

A model that used an ideal check valve that opens and closes instantaneously was also used to study the system. A comparison between that simplified model and the equations in Sec. 3 showed that the dynamics of the check valve contribute about 1.3 J of extra energy loss per switch. This points to the need to have a check valve that open and closes as fast as possible to reduce power loss.

The simulations presented in this section were done with a duty ratio of 50%. With a properly timed locking mechanism, the soft switching approach is still valid for duty ratios that are lower. As the duty ratio is decreased, the amount of time that the load valve is open is decreased. However, by design, the soft switch piston is locked at L_1 any time the load valve is open, so no timing issues arise from decreasing the duty ratio.

As the duty ratio is increased, however, time that the tank valve is open is decreased. During one cycle, the soft switch chamber must fill and empty while the tank valve is open in order for the system to operate properly. The speed at which the chamber empties is a function of the spring force, which forces the stored fluid through the tank valve. As the duty ratio is increased, there will be a point where there is not enough time for the chamber to fully empty before it must start filling again. Once this point is reached, the soft switching approach can no longer eliminate throttling during all four transitions. However, once proper operation is no longer possible, the locking mechanism can be disabled, and three of the four transition losses can still be eliminated (loss during t_2 will remain). To gain a greater range of feasible duty ratios, the system can be sized to empty faster. This is done by either storing less fluid (i.e., not completely eliminating the power loss during t_2) or using a stronger spring. Both these options result in additional power loss. Thus, a design choice must be made between efficiency and range of operation based on the expected operating conditions. As the PWM frequency is increased, there will be less time to empty the soft switch chamber. However, if the transition time is similarly scaled, then less fluid will have to be stored, and the timing will be similar to the slower system.

Despite the limited duty ratio range where the soft switch can properly operate, the approach provides a benefit across the full range of duty ratios. Figure 12 shows the improvement from the check-valve-only circuit to the soft switching circuit across a range of load pressures and duty ratios. Notice the discontinuity around 70% duty ratio. For the components sized in this simulation, that is the point where the soft switch did not have enough time to empty before filling again. However, notice that there is still substantial benefit beyond this point.

The system presented in this paper was operated at 20 Hz PWM frequency. The concept is valid at higher frequencies with the caveat that the timing issue described in the previous paragraph is taken into consideration. In addition, the compressibility of the oil in the inlet volume of the system can decrease the system effectiveness at higher PWM frequencies. This is a feature of all on/off controlled systems with or without soft switching. Thus, a system with a sufficiently small inlet volume is a prerequisite for a properly functioning soft switch system. For example, in simulation, the system was able to operate effectively at 80 Hz with a 2.0 ms transition time when the inlet volume was decreased to 8 cm^3 and L_1 was reduced to 3 mm.

The concept has been described without discussion of the locking mechanism to be used. Several options exist for creating a lock with the required actuation speed, such as piezoelectric

Downloaded 29 Oct 2012 to 128.101.142.152. Redistribution subject to ASME license or copyright; see http://www.asme.org/terms/Terms_Use.cfm

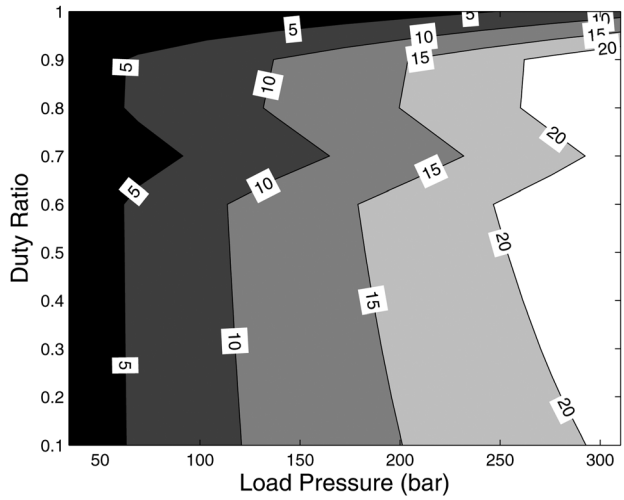

Fig. 12 Reduction in energy lost/switch (J) from the check valve to the soft switching case

actuators, pressure triggered latches, or mechanisms built into the on/off valve. Ideally, the locking mechanism will be triggered by a method with knowledge of the valve position. However, if this level of precision is not possible, a mechanism that is triggered by the pressure difference between the load and the inlet as the tank valve opens could also be used. This approach, while simpler, will result in some additional loss due to the time delay required for the tank valve to open enough for the pressure to fall below the load pressure. The locking mechanism that is selected must be capable of quickly releasing under a high load. The locking mechanism does not need to do much work, so if an approach can be designed to handle the large speeds and forces, the overall power loss should not be affected. Some ideas for accomplishing this include a piezo-induced binding of the piston, an unstable locking linkage, or a retracting pin. The design of this mechanism is relegated to future work.

The valve simulated in this paper had a transition time of 7.5 ms. In order to match the energy loss of the soft switching system with a faster valve, the transition time needs to be increased to about 1.7 ms for the relief valve case in simulation. Note that these are the times for one transition event. This represents a 4.4 times increase in speed, which will typically correspond to a significant increase in price and actuation power for the valve. Thus, the soft switching approach has the potential to enable on/off control using lower speed valves.

6 Conclusion

A method of significantly reducing the power lost in an on/off controlled hydraulic system has been introduced. The soft switching concept is a method for providing temporary alternative fluid paths around a transitioning valve, thus avoiding the associated throttling losses. A check valve can be used to avoid two of the four transitions that occur in a three-way PWM controlled circuit; the remaining two transitions need an additional device to be reduced. The soft switching chamber, which consists of a small piston with a spring and a lock, can be used to reduce the overall system loss. Simulations were performed based on a PWM valve operating at 20 Hz, and it was found that application of the soft switching concept resulted in an 81% reduction in transition losses and a 64% reduction in overall system losses. This approach can make the efficient approach of on/off valve control even more attractive as an option for controlling hydraulic systems. In addition, soft switching can facilitate the use of slower valves for on/off control by significantly reducing the power loss resulting from slow transition times. In simulation, the soft switching system had the same efficiency as a system with a valve that was 4.4 times faster. This will allow simpler, lower power valves to achieve results similar to faster valves. This approach can be extended to other on/off valve controlled circuits, such as variable motors and transformers.

Acknowledgment

This material is based upon work performed within the ERC for Compact and Efficient Fluid Power, supported by the National Science Foundation under Grant No. EEC-0540834.

References

[1] Tomlinson, S. P., and Burrows, C. R., 1992, "Achieving a Variable Flow Supply by Controlled Unloading of a Fixed-Displacement Pump," ASME J. Dyn. Syst., Meas., Control, **114**(1), pp. 166–171.
[2] Li, P., Li, C., and Chase, T., 2005, "Software Enabled Variable Displacement Pumps," Proceedings of the 2005 ASME-IMECE, Paper No. IMECE2005–81376.
[3] Cao, J., Gu, L., Wang, F., and Qiu, M., 2005, "Switchmode Hydraulic Power Supply Theory," Proceedings of the 2005 ASME-IMECE, Paper No. IMECE2005–79019.
[4] Rannow, M. B., Tu, H. C., Li, P. Y., Chase, T. R., 2006, "Software Enabled Variable Displacement Pumps—Experimental Studies," Proceedings of the 2006 ASME-IMECE, Chicago, IL, Nov. 5–10, Paper No. IMECE2006-14973.
[5] Tu, H. C., Rannow, M. B., Van de Ven, J. D., Wang, M., Li, P. Y., Chase, T. R., 2007, "High Speed Rotary Pulse Width Modulated On/Off Valve," Proceedings of the 2007 ASME-IMECE, Seattle, WA, Nov. 11–15, Paper No. IMECE2007–42559.
[6] Mohan, N., 2005, *First Course on Power Electronics*, MNPERE, Minneapolis, MN, pp. 101–108.
[7] Lu, N., Fronczak, F., and Beachley, N., 1990, "Comparison of Analytical and Experimental Investigations of a Hydraulic Multi-Circuit Sequential Apportioning System," Soc. Automot. Eng. Trans., **99**, pp. 266–275.
[8] Yu, J., Chen, Z., and Lu, Y., 1994, "The Variation of Oil Effective Bulk Modulus With Pressure in Hydraulic Systems," ASME J. Dyn. Syst., Meas., Control, **116**(1), pp. 146–150.

Downloaded 29 Oct 2012 to 128.101.142.152. Redistribution subject to ASME license or copyright; see http://www.asme.org/terms/Terms_Use.cfm